Oldcastle® Enclosure Solutions

Plastibeton® CHANNEL SYSTEM

20” X 16” Drive On Trench

Southern Company Mark Number

MODEL OES Plastibeton 2016

Ordering Information:
Qty of Trench Sections (OES 3150000 Full Section Plastibeton with Black Covers , Caps, Protection Rods)
Qty of Tee’s (OES 3150002 Plastibeton “T” Section Complete)
Qty of 90’s (OES 3150001 Plastibeton “90” Section Complete)
Qty of End Plates (OES 33650212 End Plate)
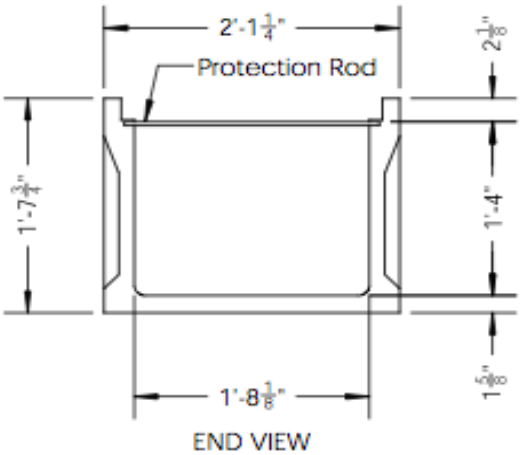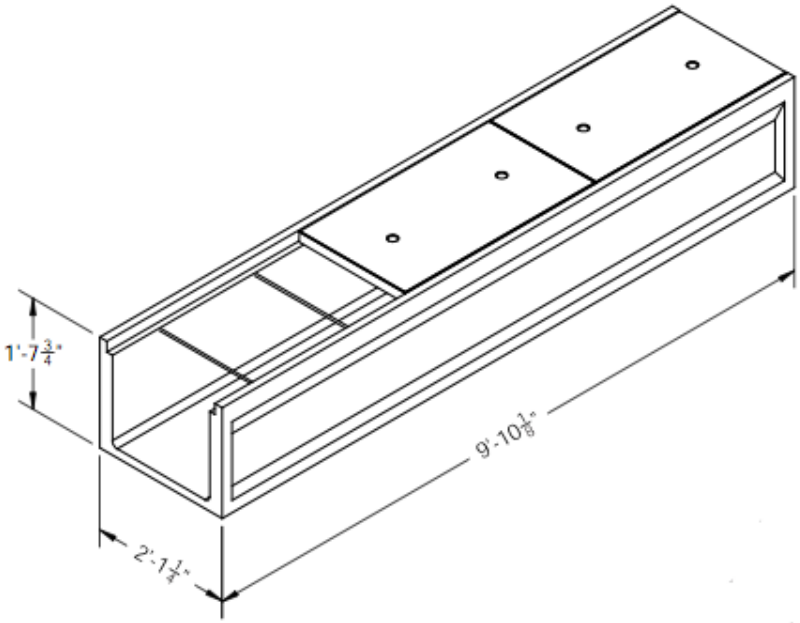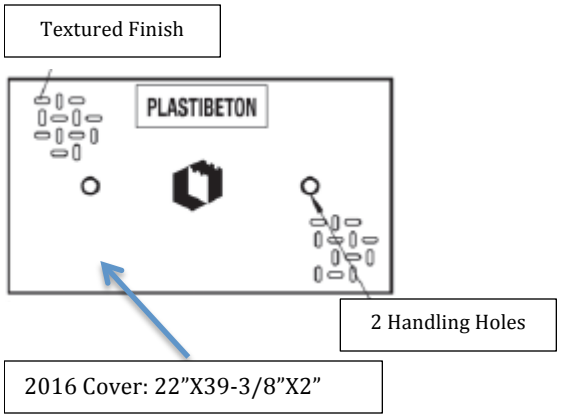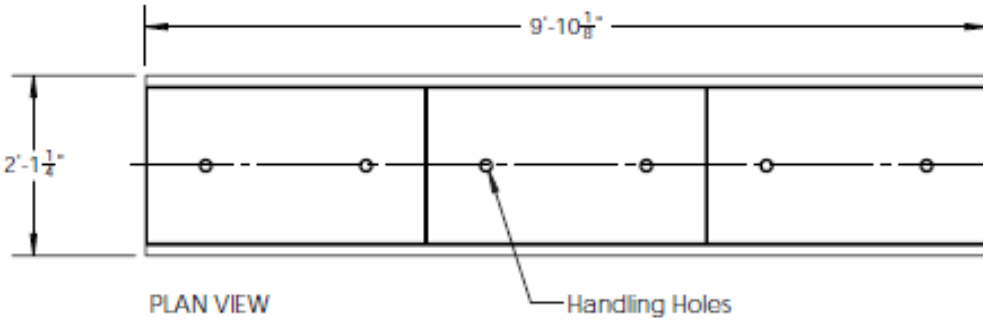
Trench Weight: 990LBS
Cover Weight: 115LBS each (3 per)